FG1103	Quality System Management Certified FM 579557	Rev.01 18/04/2018

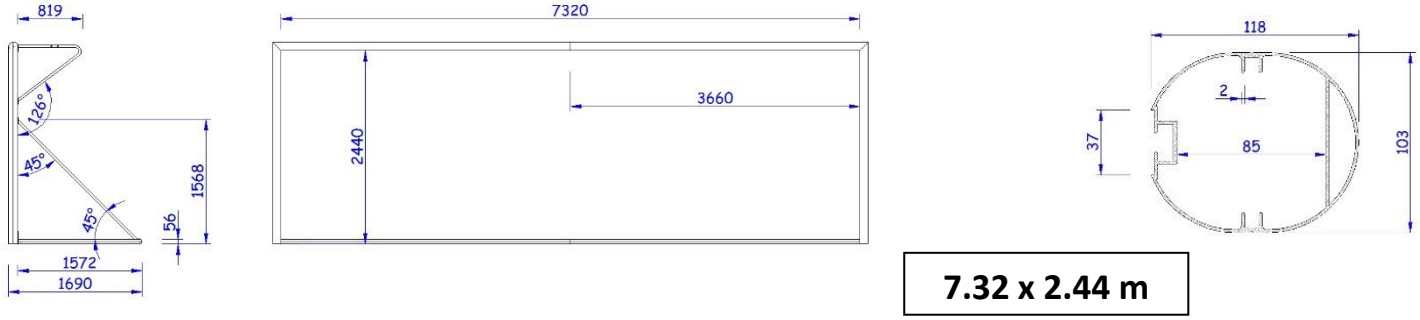

7.32 x 2.44 m

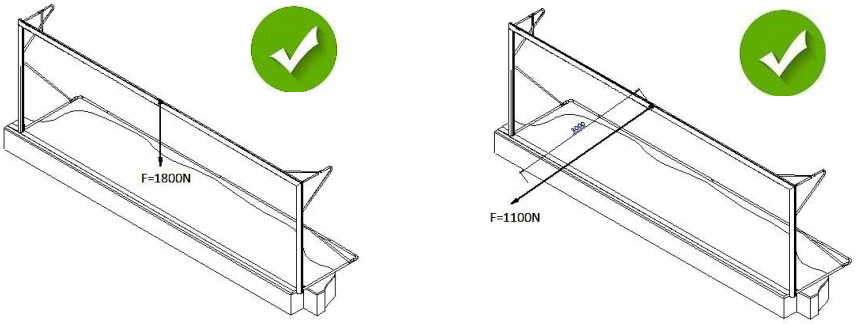

CONFORME ALLA NORMA

COMPLIES WITH

CONFORME À LA NORME

ENTSPRICHT DER NORM

EN 748:2013

EN 748:2013 taglie/sizes/tailles/größen
7.32 x 2.44 m – 5.00 x 2.00 m

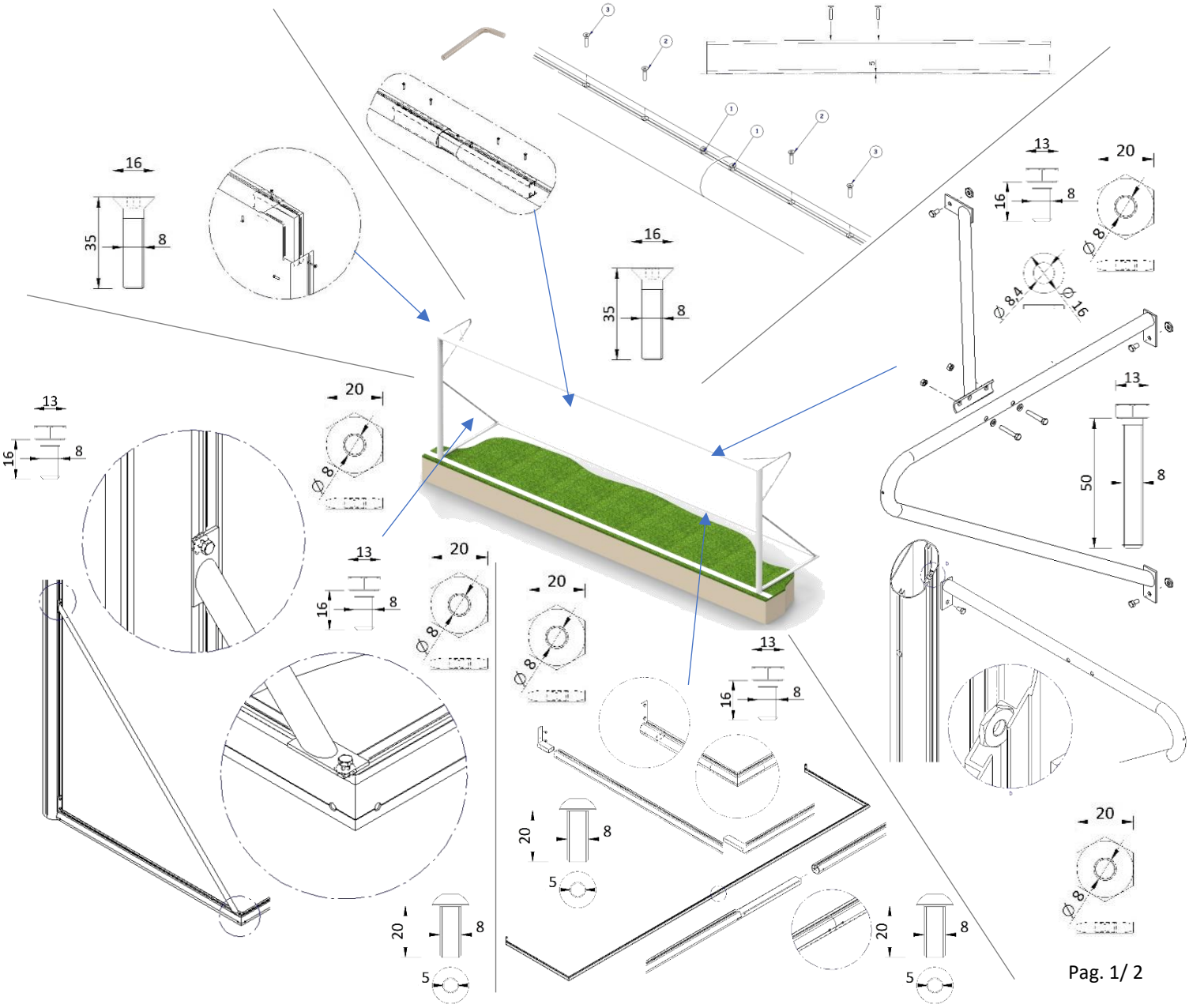

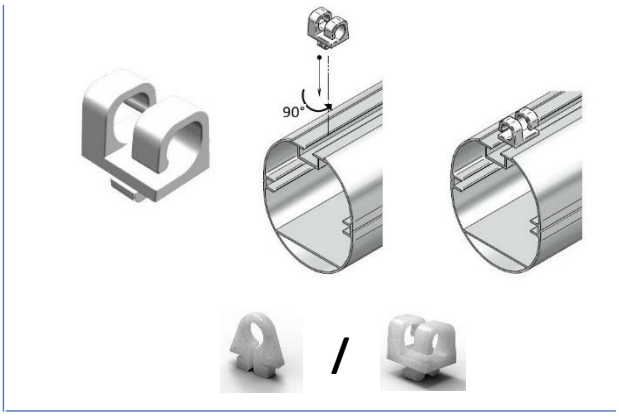
90°
/

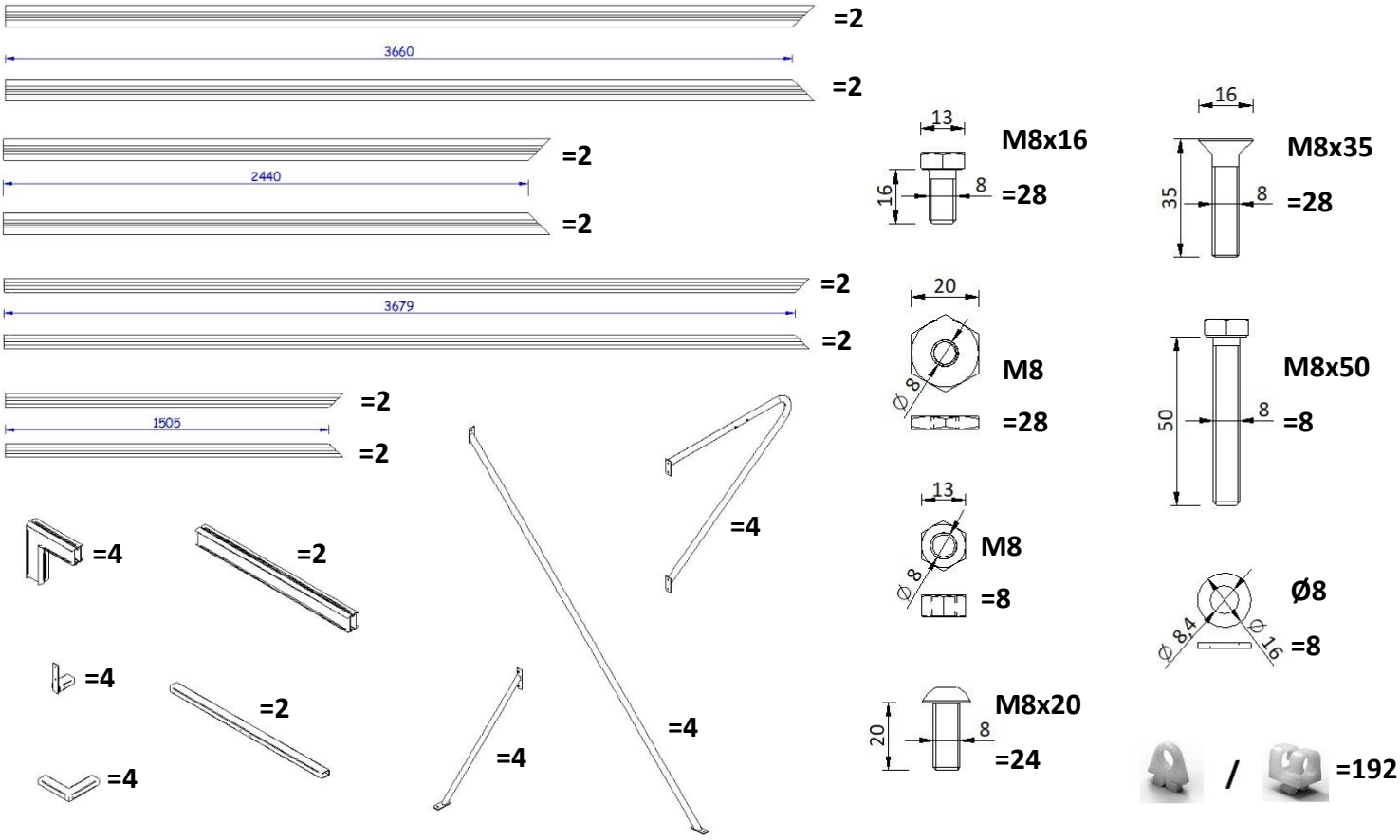
=2
3660
=2
=2
2440
=2
=2
3679
=2
=2
1505
=2
=4
=2
=4
=2
=4
=4
=4
=4
13
M8x16
16
8
=28
16
M8x35
35
8
=28
20
M8
Ø 8
=28
M8x50
50
8
=8
13
M8
Ø 8
=8
Ø8
Ø 8.4
Ø 16
=8
M8x20
20
8
=24
/
=192