ASSEMBLY INSTRUCTIONS

FG1106

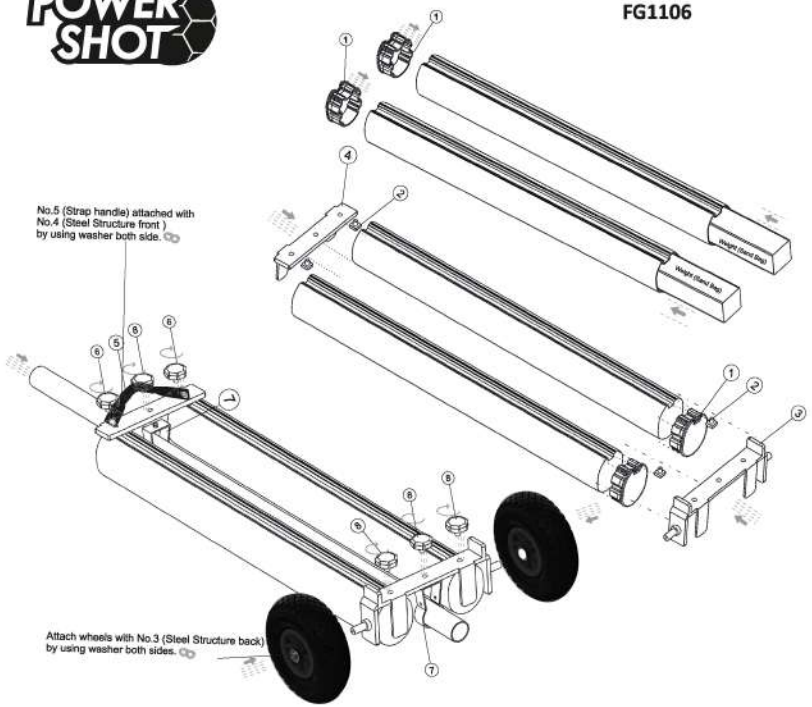

	COMPONENTS	
1.	Caps	4 pcs
2.	Tube nuts	4 pcs
3.	Structure's Back	1 pc
4.	Structure's Front	1 pc
5.	Strap Handle	1 pc
6.	Big Knob	2 pcs
7.	Metal Clip with bolt	2 pcs
8.	Small Knob	4 pcs
9.	Plain nuts	2 pcs
10.	Spanner	1 pc

ASSEMBLY INSTRUCTIONS

FG1106

Option-2.

- Insert plain nut inside the aluminum channel of the tube you wish to add
- Place aluminum channel in the middle.
- Use small knobs in the middle hole from both plates to tighten by screwing into the plain nut.

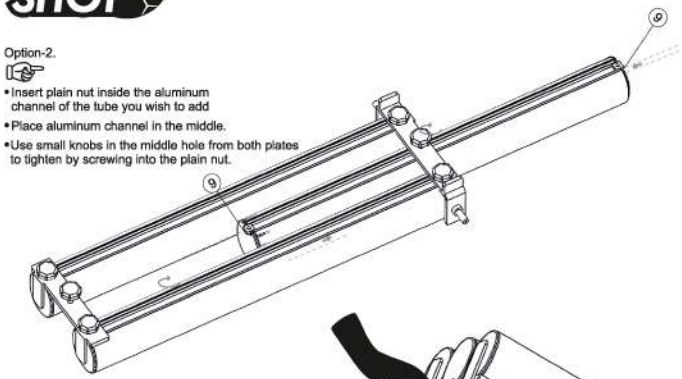

	COMPONENTS	
1.	Caps	4 pcs
2.	Tube nuts	4 pcs
3.	Structure's Back	1 pc
4.	Structure's Front	1 pc
5.	Strap Handle	1 pc
6.	Big Knob	2 pcs
7.	Metal Clip with bolt	2 pcs
8.	Small Knob	4 pcs
9.	Plain nuts	2 pcs
10.	Spanner	1 pc

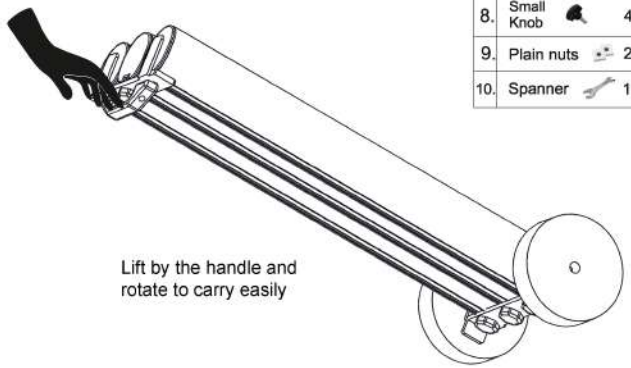

Lift by the handle and rotate to carry easily